8. Exploded Views and Parts List(ML-3561ND/SEE)

Contents

8.1	Main Assembly	p.8-2
8.2	Cover Assembly	p.8-3
8.3	Frame Assembly	p.8-4
8.4	Fuser Unit	p.8-6
8.5	REGI Assembly	p.8-7
8.6	Main Motor Assembly	p.8-8
8.7	Deve Motor Assembly	p.8-9
8.8	Exit Sorenoid Assembly	p.8-10
8.9	Cassette Assembly	p.8-11
8.10	SCF Unit	p.8-12
8.11	Duplex Unit	p.8-13

Part Number & Description format.

Part numbers and descriptions are defined according to a company standard. The information below will help you to understand the part number format and assist when ordering spare parts.

• **There are two types of Part number format.**

(● : number ■ : letter)

Type 1 : This format is used throughout Samsung on all product ranges.
Typically it is used for small components and electronic parts.

Type 2 : This format is controlled by individual Samsung Divisions and is used on specific products, typically for mechanical parts. Type 2 format part numbers fall into 2 categories:

• **A/S privately used part :** It is only used for A/S .

• **Ass'y part :** Assemblies consisting of 2 or more parts. Also used for Service manuals, user guides and diagrams.

• Ass'y parts and A/S privately used Parts can be distinguished by the part Code and Description. They are always Type 2 format. The 2 leading characters indicate private or assembly parts.

DIVISION	PART CODE	DESCRIPTION
A/S Private	**81-****** (JB81-00039A)	AS-********* (AS-USE)
ASS'Y Part	**75-****** (JB75-00068A)	MEC-******** (MEC-CHUTE)
ASS'Y Part	**92-****** (JB92-01131A)	PBA ********* (PBA MAIN-CONTROLLER)
ASS'Y Part	**97-****** (JB97-01089A)	MEA ********* (MEA UNIT-PULLEY IDLE)

IT-Spares.eu

8.1 Main Assembly

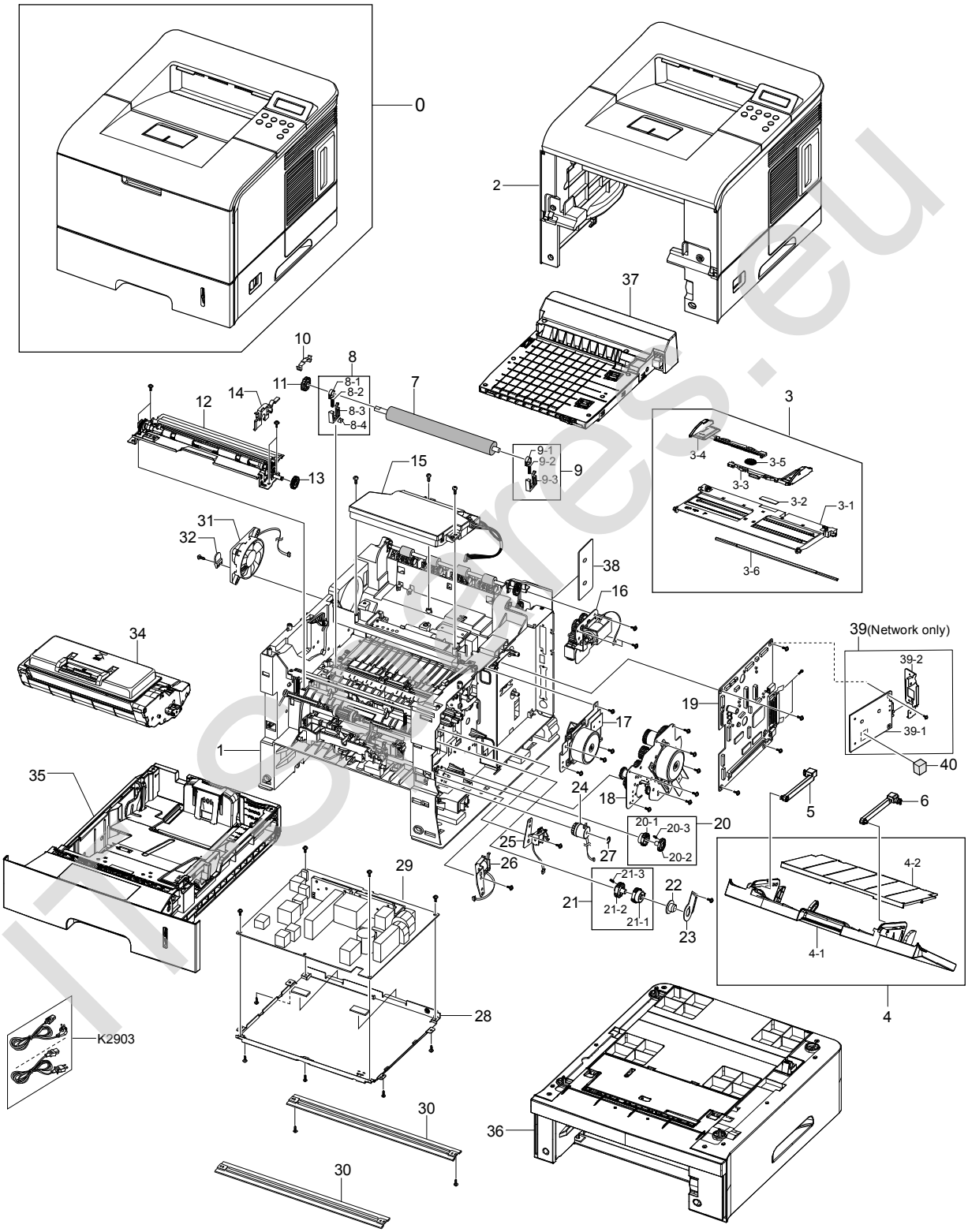

8.2 Cover Assembly

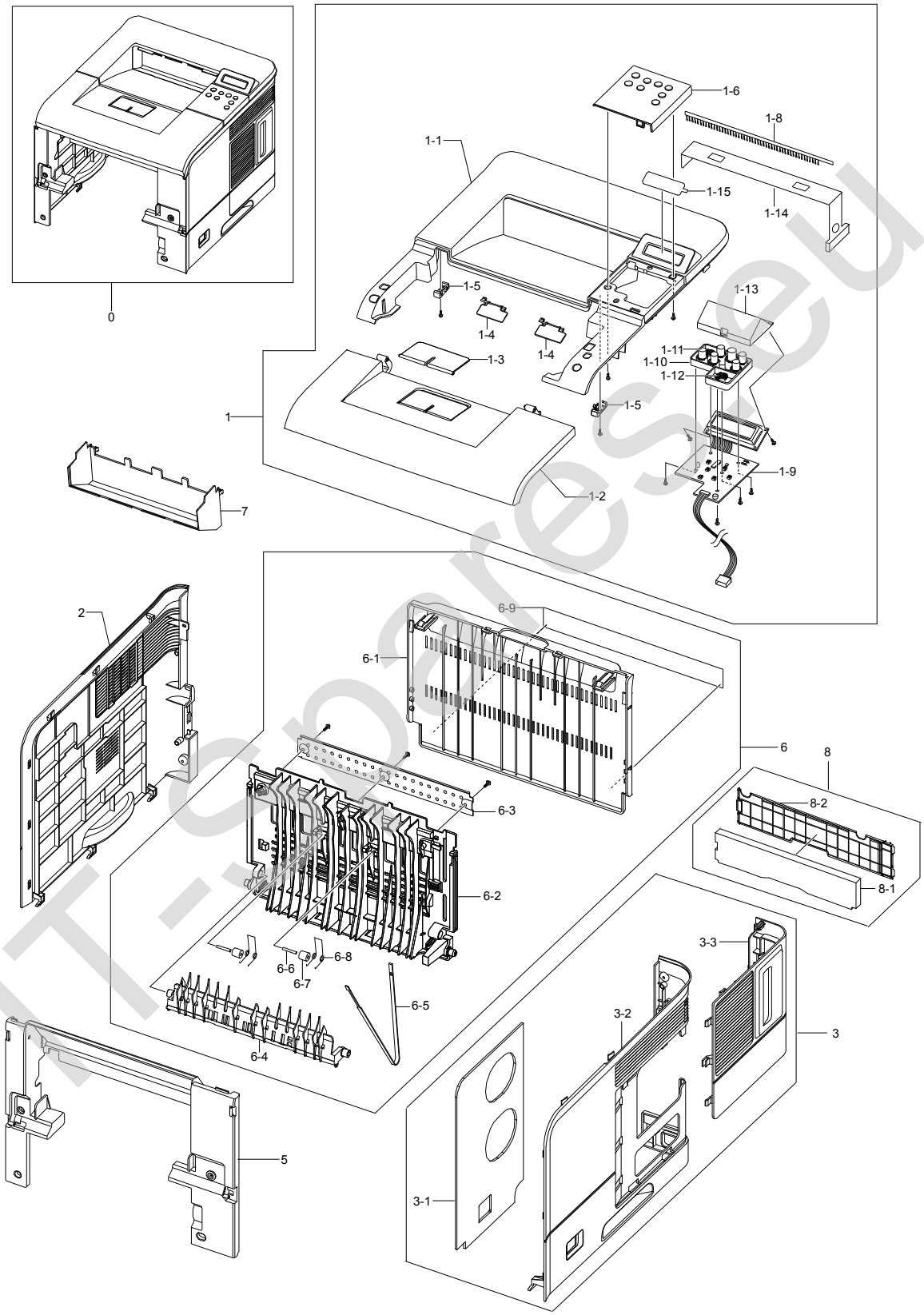

IT-Spares.eu

8.3 Frame Assembly(1/2)

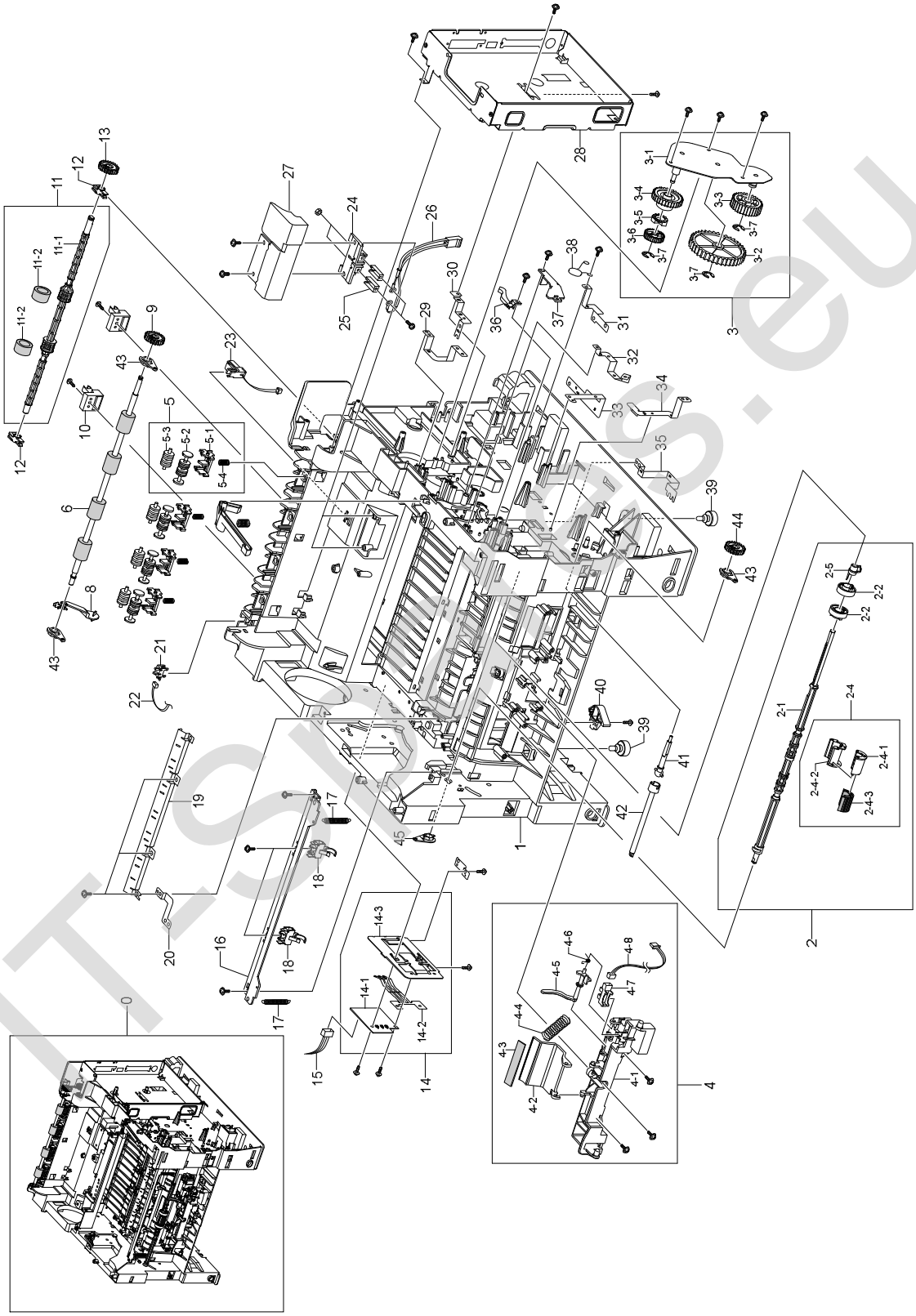

IT-Spares.eu

Frame Assembly(2/2)

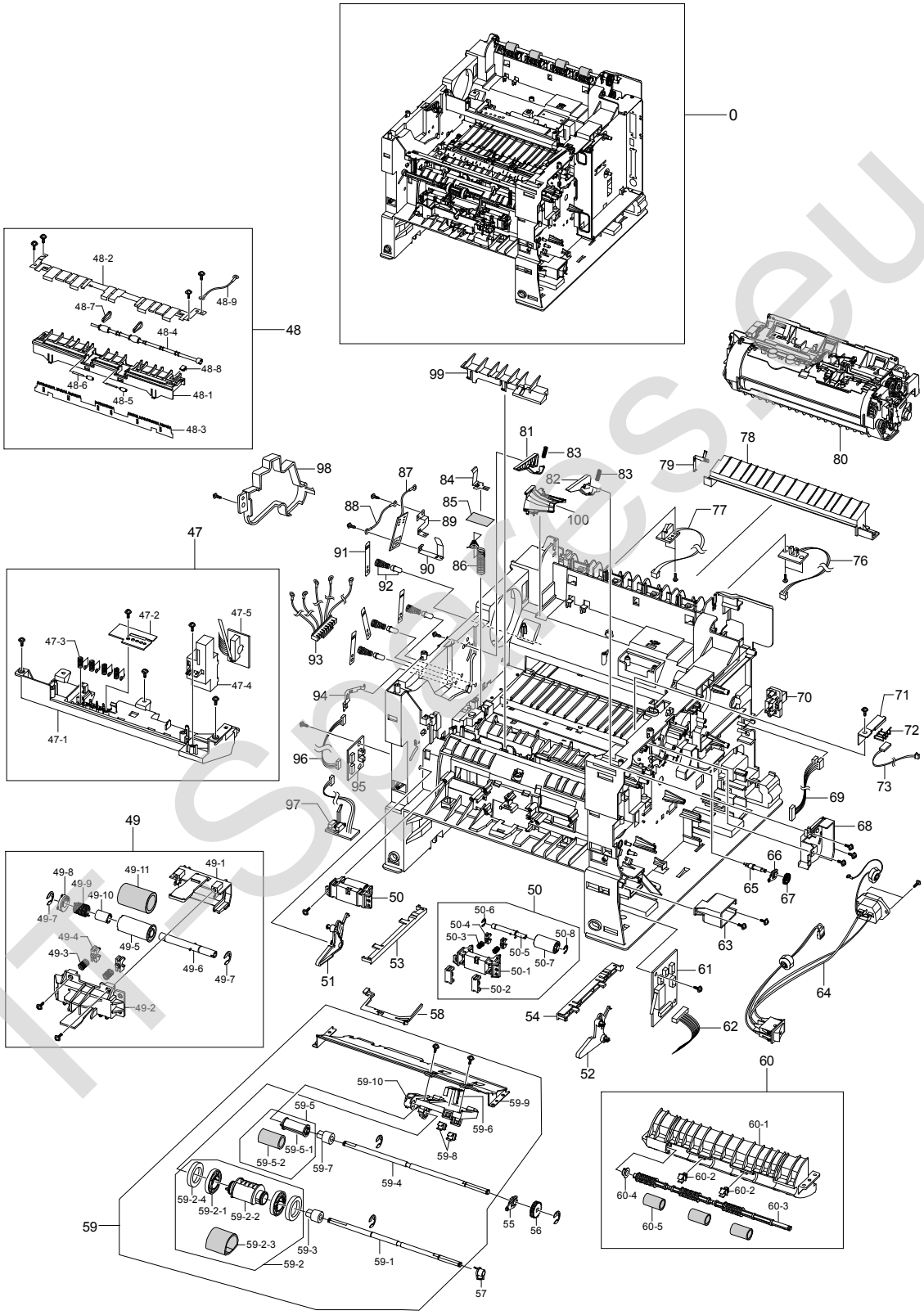

IT Service.eu

8.4 Fuser Unit

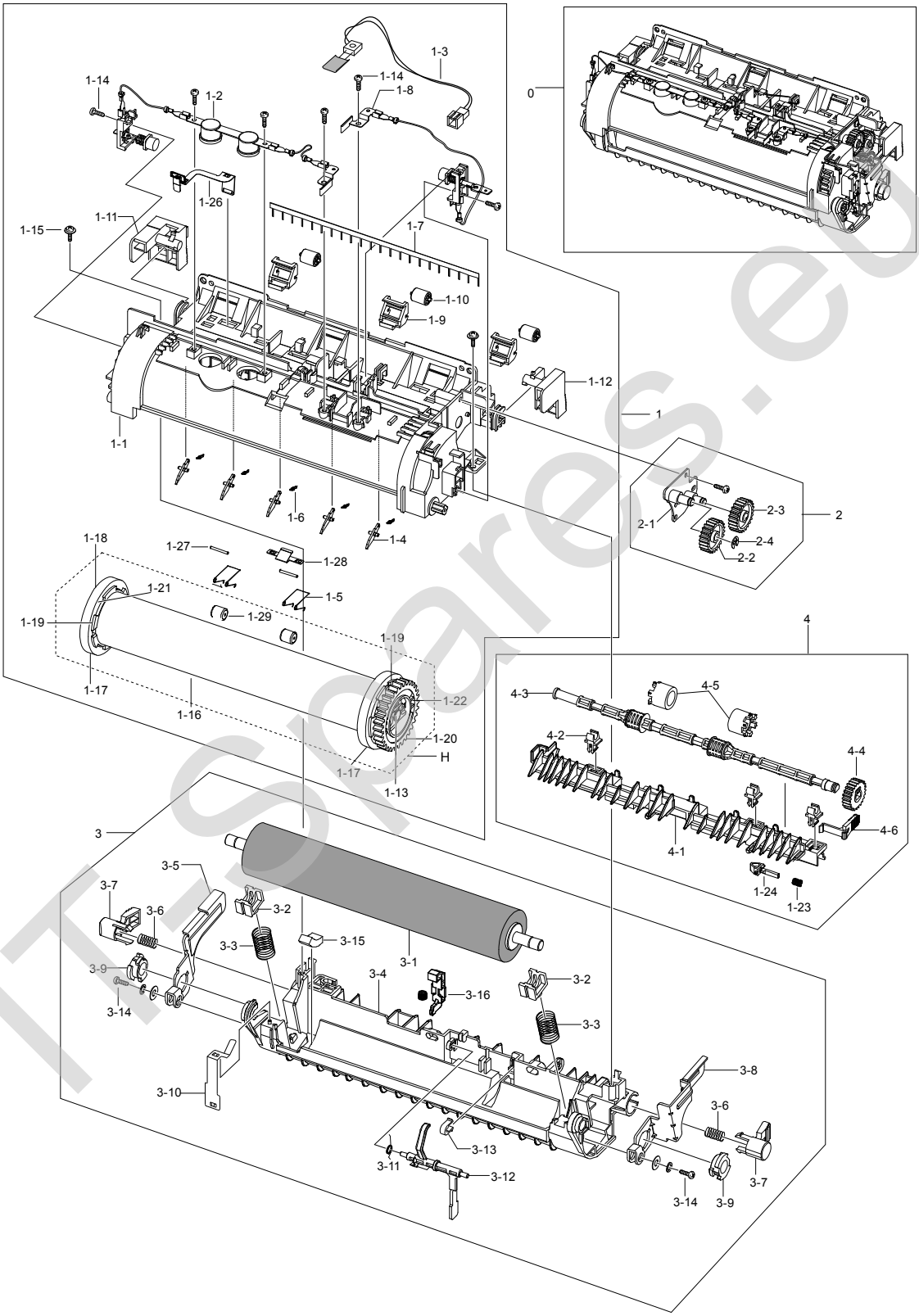

ITSpares.eu

8.5 REGI Assembly

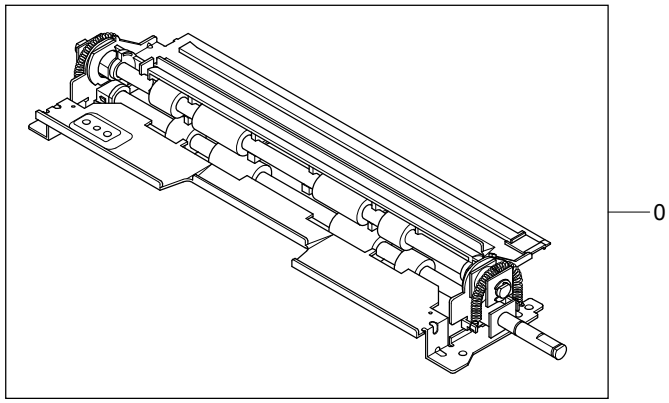

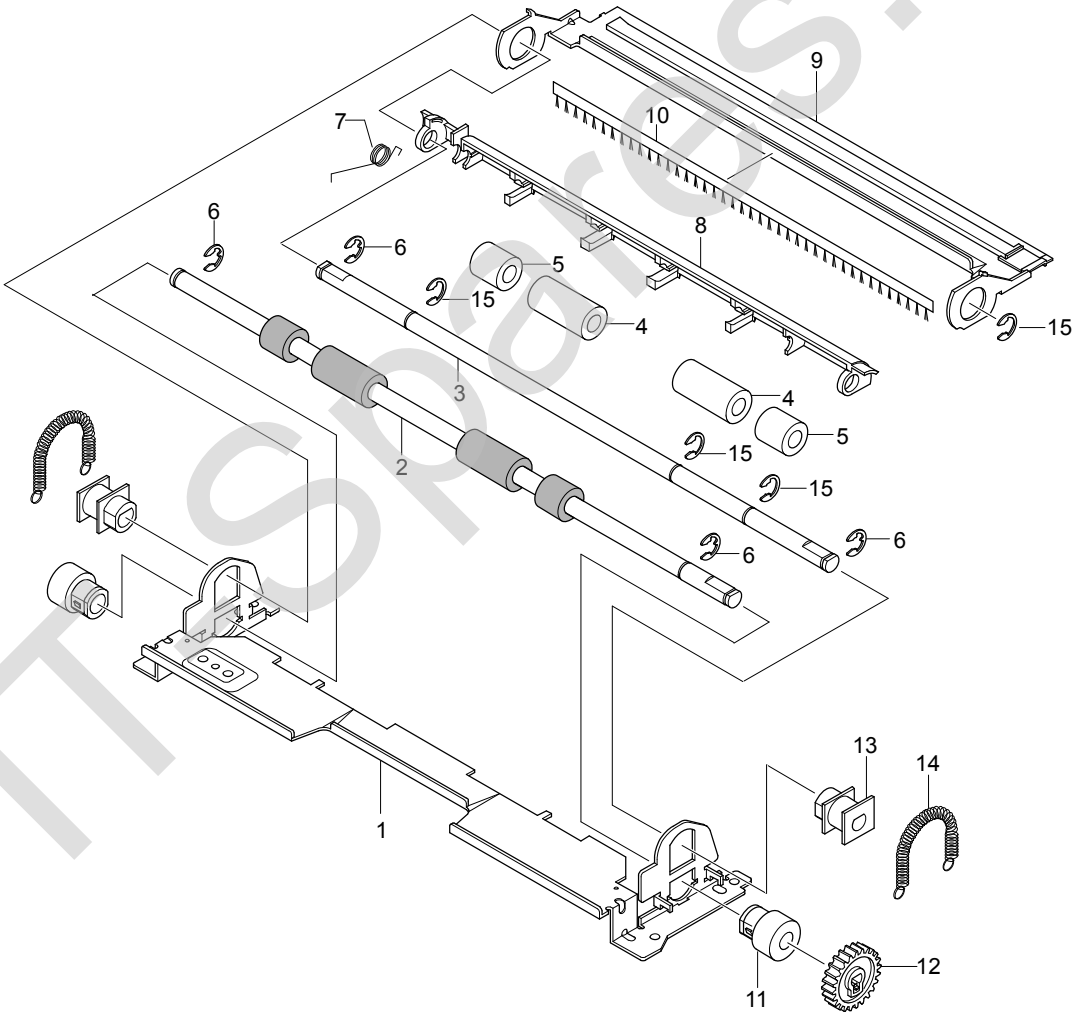

ITSpares.eu

8.6 Main Motor Assembly

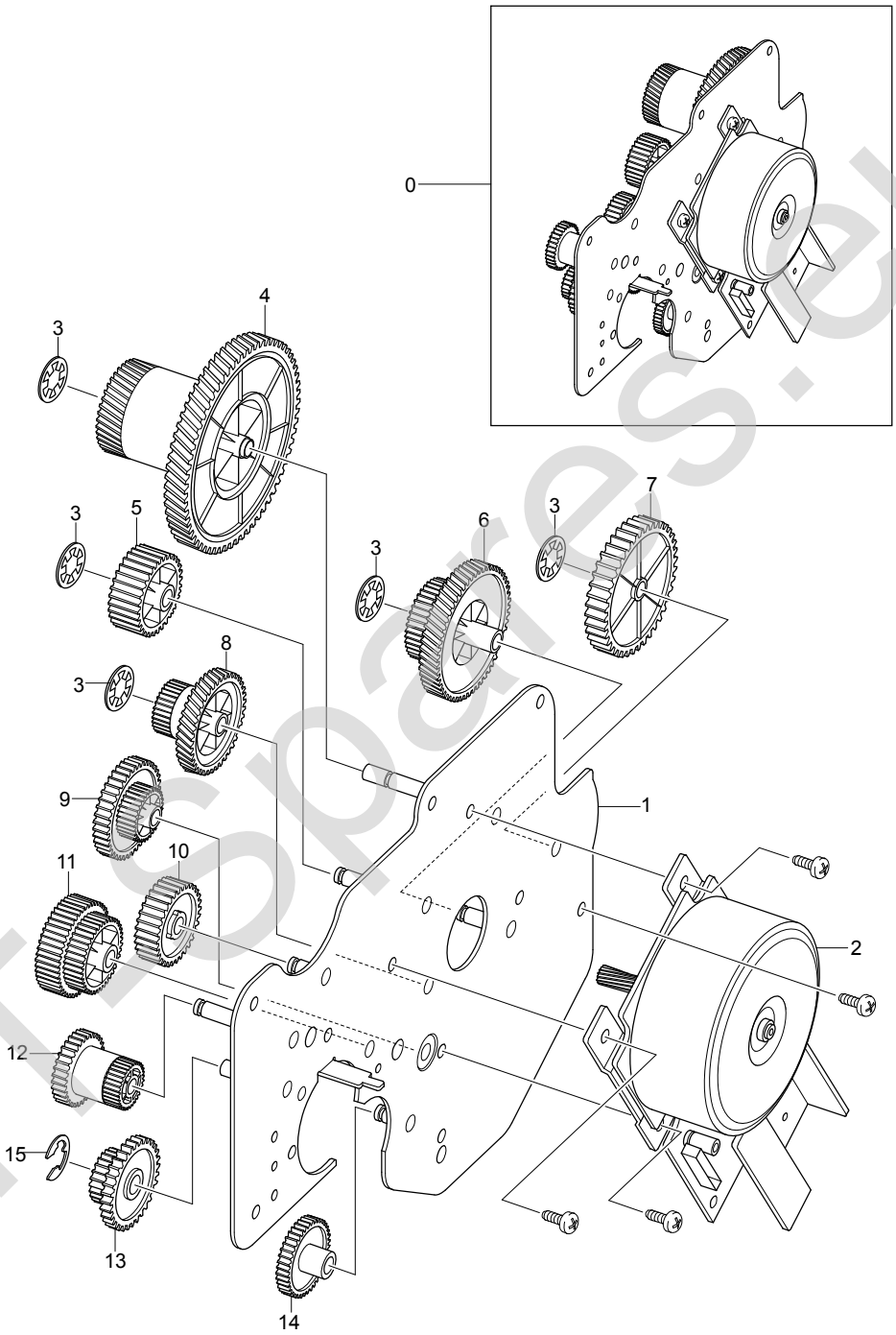

ITSpares.eu

8.7 Deve Motor Assembly

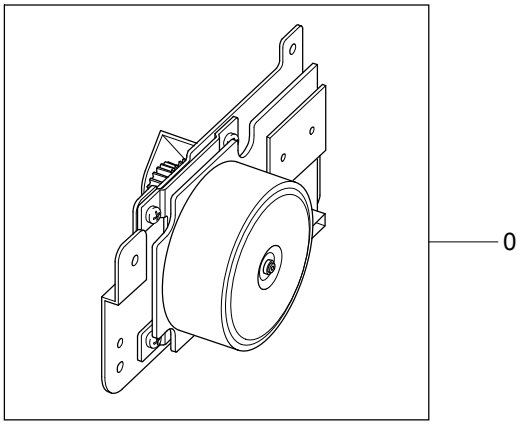

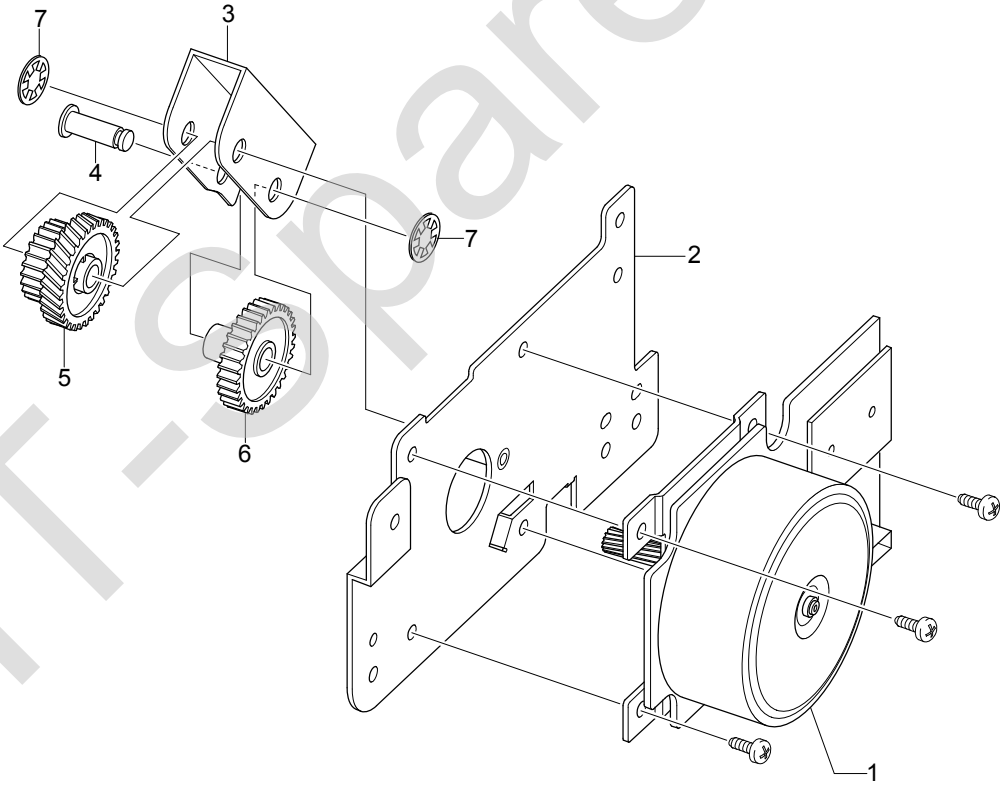

IT-spares.eu

8.8 Duplex Sorenoid Assembly

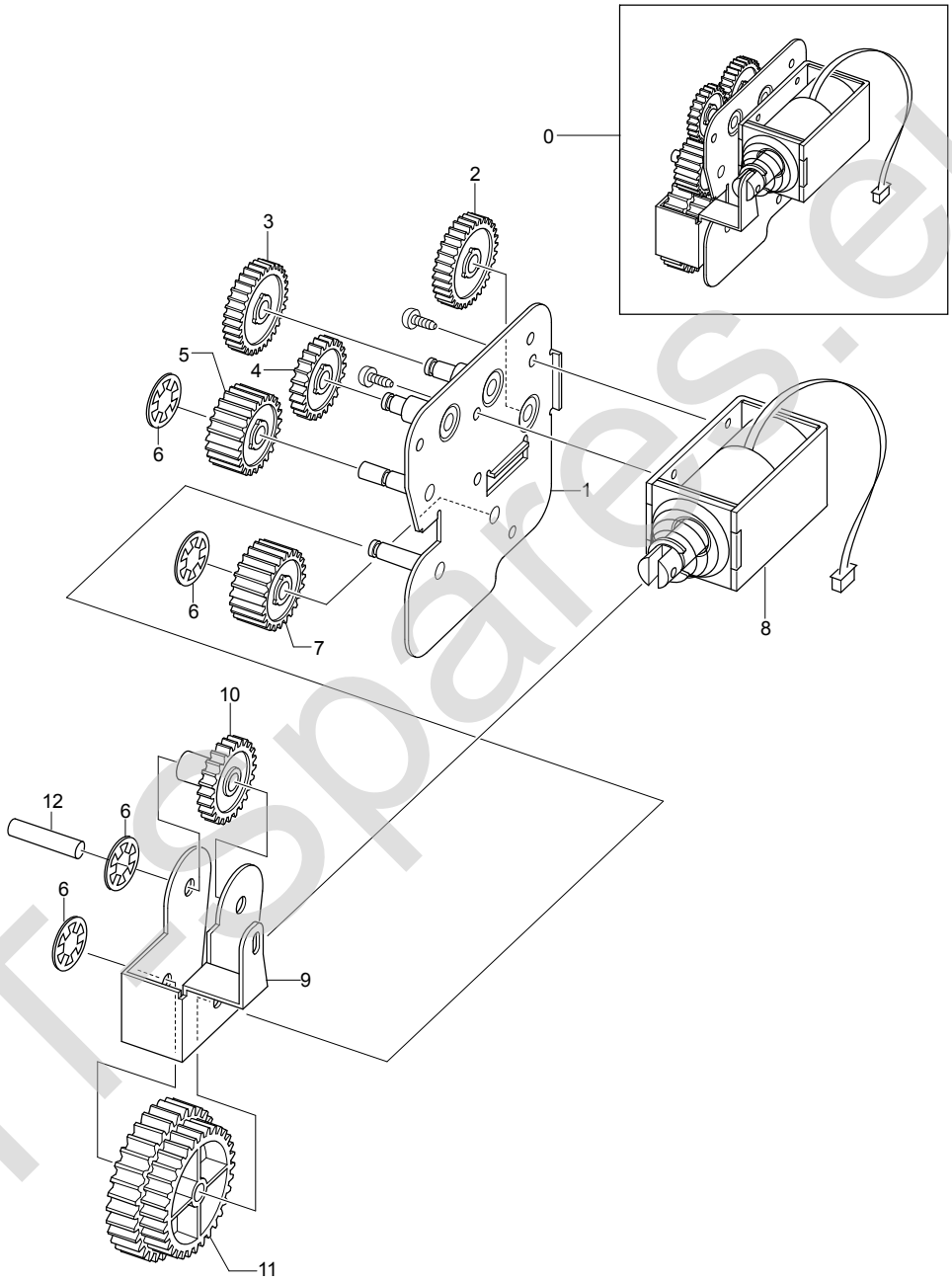

ITSpares.eu

8.9 Cassette Assembly

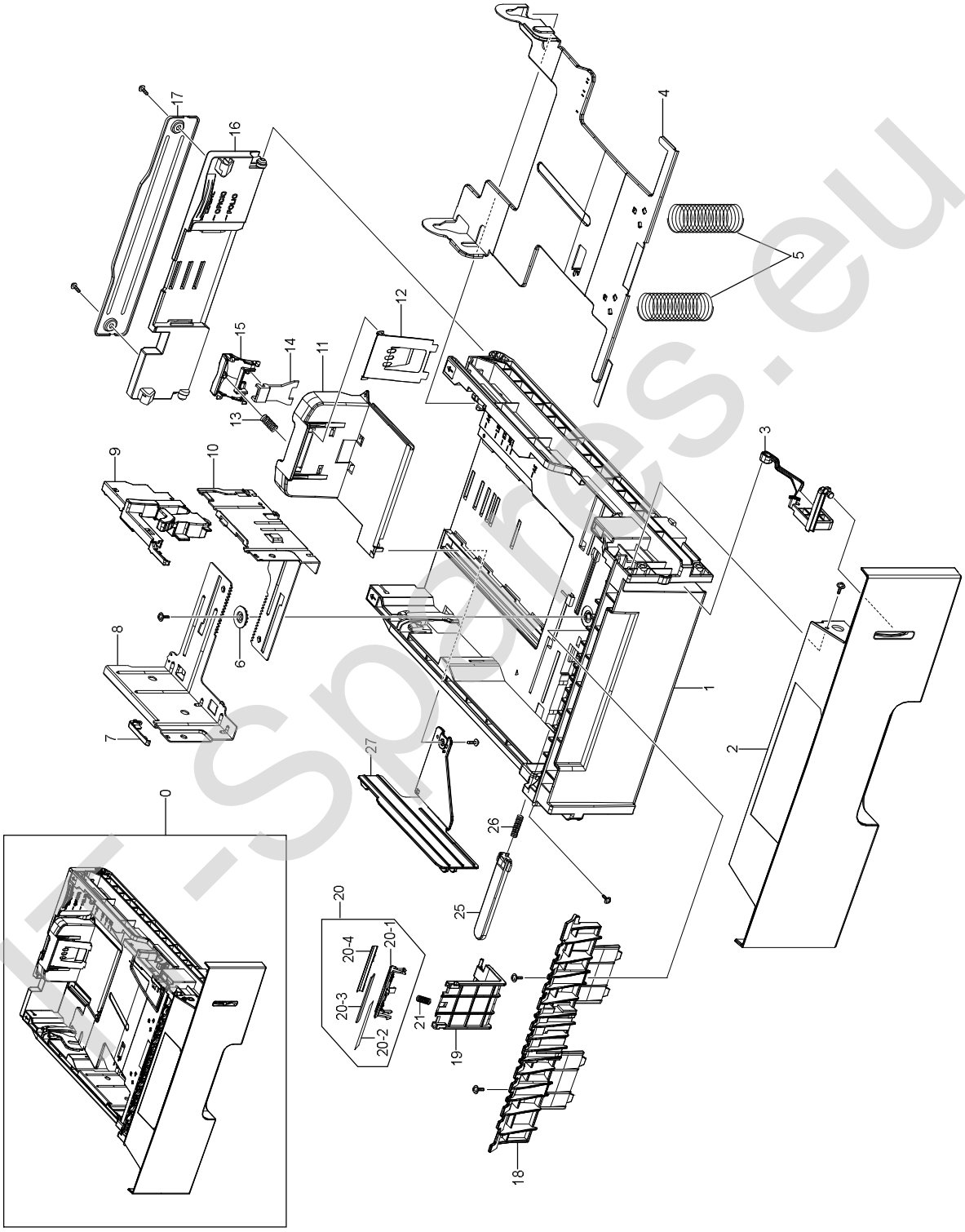

IT-Spares.eu

8.10 SCF Unit

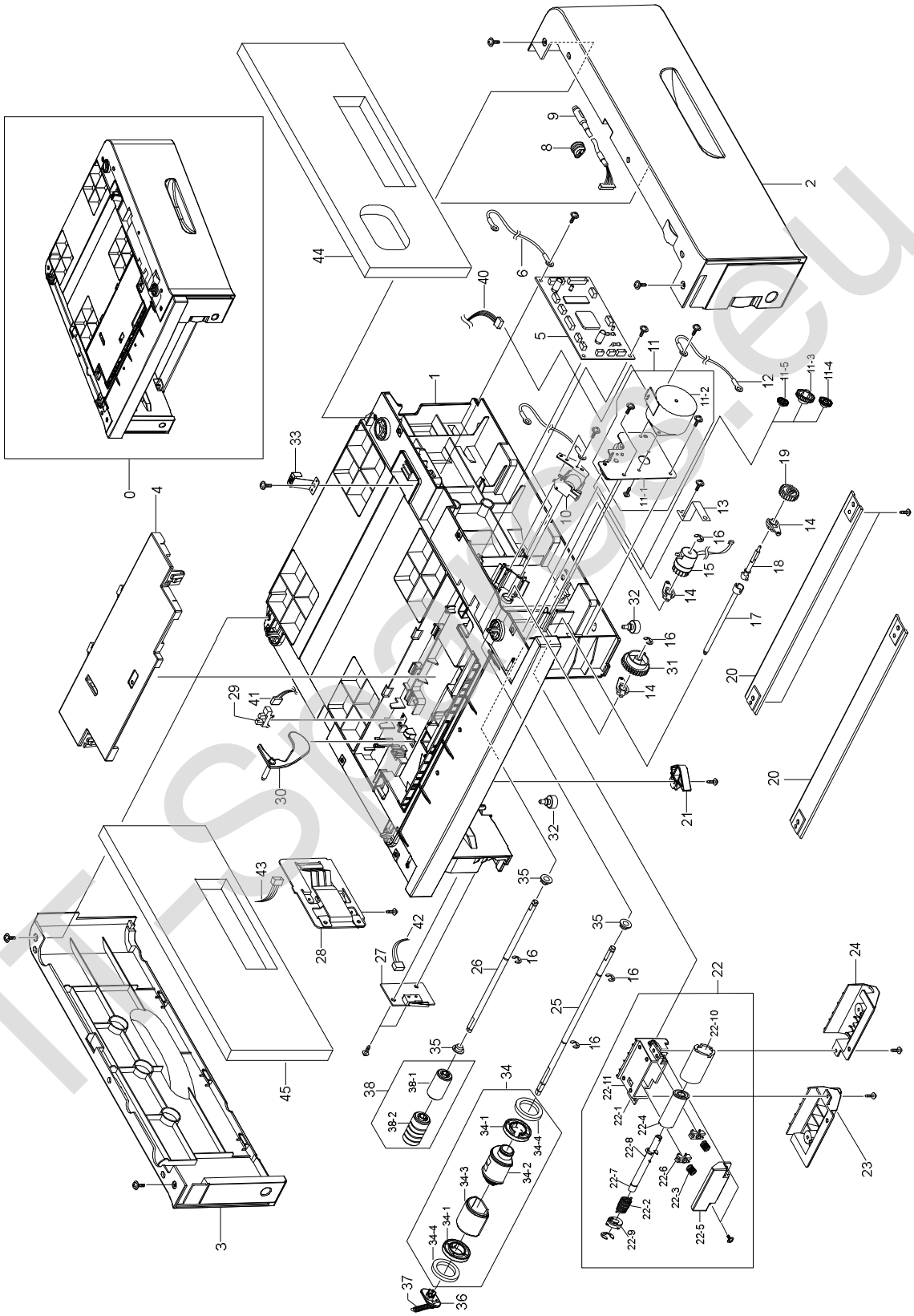

ITSpares.eu

8.11 Duplex Unit

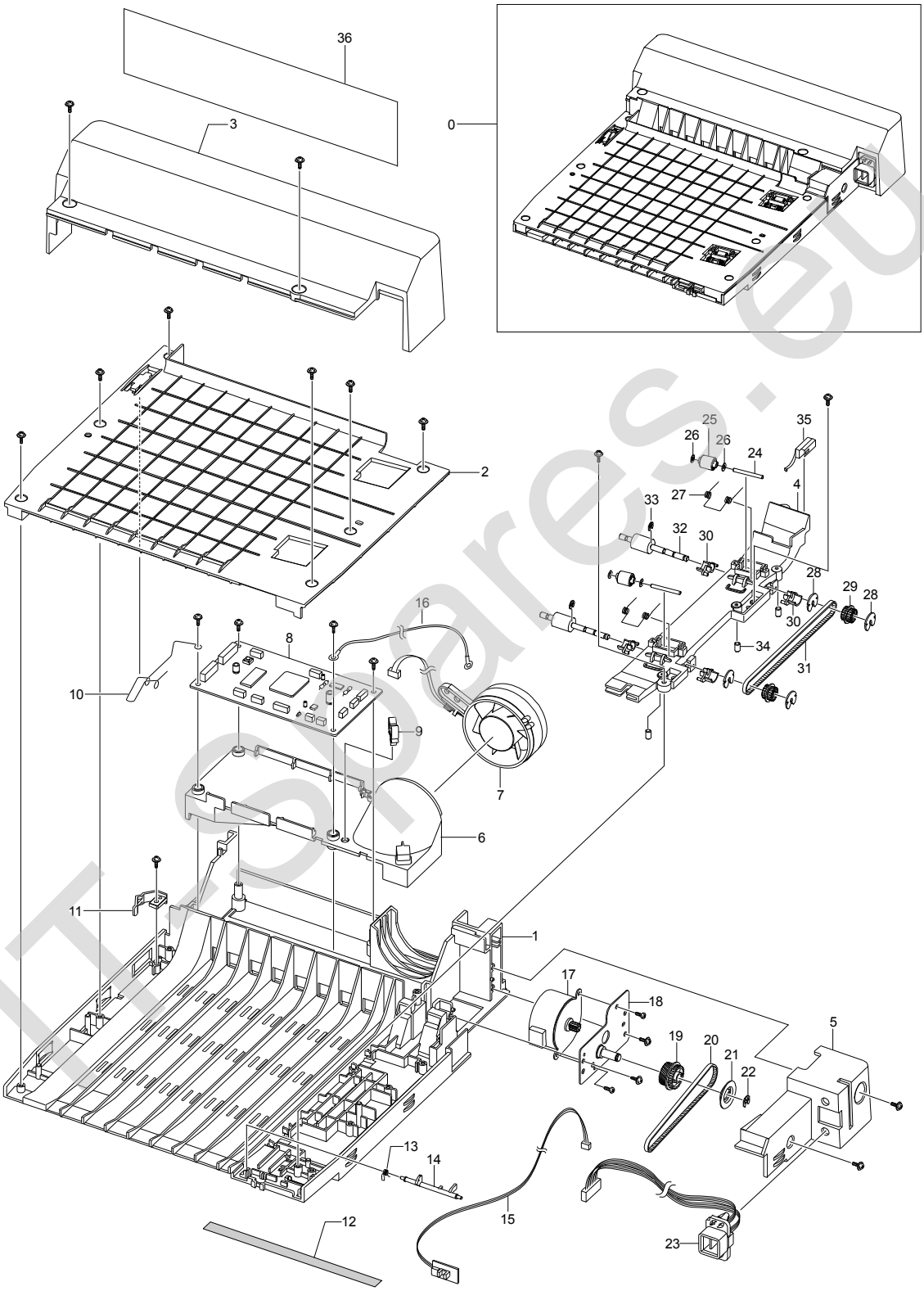

ITspares.eu

Basic Parts List (ML-3561ND/SEE)

Service BOM(SA : Service Available, **SNA** : Service not Available)

Drawer# (Section-No)	Part Code	Description	Q'ty	Status (SA/SNA)	Remark
8.1 Main Assembly					
8.1-1	JC96-03416B	ELA UNIT-FRAME BASE,220V	1	SA	AC 220V
8.1-2	JC96-03402E	ELA HOU BASE-HOUSHING	1	SNA	
8.1-3	JC97-02230B	MEA UNIT-KNOCK_UP MP	1	SA	
8.1-3-1	JC61-01251B	PLATE-M-KNOCK UP MP	1	SNA	
8.1-3-2	JC74-00011A	MPR-PAD KNOCK UP MP	1	SNA	
8.1-3-3	JC72-01006B	PMO-SIDE GUIDE MP(R)	1	SA	
8.1-3-4	JC72-01005B	PMO-SIDE GUIDE MP(L)	1	SA	
8.1-3-5	JG66-40003A	GEAR-PINION	1	SA	
8.1-3-6	JC66-00895A	SHAFT-REINFORCEMENT	1	SNA	
8.1-4	JC97-02231A	MEA UNIT-COVER MP	1	SA	
8.1-4-1	JC63-00695A	COVER-M-MP_XRX	1	SNA	
8.1-4-2	JC63-00691B	TRAY-M_EXTEND_MP	1	SNA	
8.1-5	JC63-00694B	TRAY-M-LINK MP(L)	1	SA	
8.1-6	JC63-00689B	TRAY-M-LINK MP(R)	1	SA	
8.1-7	JC66-00540A	ROLLER-TRANSFER	1	SA	
8.1-8	JC96-01729A	ELA UNIT-HOLDER TR R	1	SA	
8.1-8-1	JC72-41142A	PMO-BUSHING TR	1	SNA	
8.1-8-2	JC61-00046A	SPRING ETC-TR R HAWK	1	SNA	
8.1-8-3	JC72-41145C	PMO-TRANSFER HOLDER R	1	SNA	
8.1-8-4	JC70-11053A	IPR-PLATE TR	1	SNA	
8.1-9	JC96-01730A	ELA UNIT-HOLDER TR L	1	SA	
8.1-9-1	JC72-41142A	PMO-BUSHING TR	1	SNA	
8.1-9-2	JC61-00047A	SPRING ETC-TR L	1	SA	
8.1-9-3	JC72-41145D	PMO-TRANSFER HOLDER L	1	SNA	
8.1-10	JC72-41292B	PMO-CAP TR	1	SA	
8.1-11	JC66-00039A	GEAR-TR29	1	SA	
8.1-12	JC96-03665A	ELA UNIT-REGI	1	SA	
8.1-13	JC66-00420A	GEAR-REGI Z25	1	SA	
8.1-14	JC67-00039A	CAP-M-GEAR	1	SA	
8.1-15	JC59-00024A	UNIT-LSU	1	SNA	
8.1-16	JC96-03426A	ELA UNIT-EXIT SOL	1	SA	
8.1-17	JC96-03408A	ELA UNIT-DEVE MOTOR	1	SA	
8.1-18	JC96-03409A	ELA UNIT-MAIN MOTOR	1	SA	
8.1-19	JC92-01657C	PBA MAIN-MAIN;ML-3560,SEC,USA,KESTREL,35	1	SA	
8.1-20	JC97-02226A	MEA UNIT-GEAR PICK UP	1	SA	
8.1-20-1	JC66-00870A	GEAR-M-PICK UP CAM	1	SNA	
8.1-20-2	JC66-00876A	GEAR-M-PICK UP	1	SNA	
8.1-20-3	JC61-00003A	SPRING ETC--CAM MP	1	SA	
8.1-21	JC97-01738A	MEA UNIT-GEAR P/UP MP CARDINA	1	SA	
8.1-21-1	JC66-00424A	GEAR-MP HOLDER_CAM	1	SA	
8.1-21-2	JC66-00423A	GEAR-MP PICK_UP	1	SA	
8.1-21-3	JC61-00003A	SPRING ETC--CAM MP	1	SA	
8.1-22	JC66-10202A	BEARING-PICK UP	1	SA	
8.1-23	JC61-00755A	BRACKET-P-SHAFT MP	1	SA	
8.1-24	JC47-00012A	MEP-CLUTCH FEED	1	SA	
8.1-25	JC33-00012A	SOLENOID-MAIN	1	SA	
8.1-26	JC33-00016A	SOLENOID-MP	1	SA	
8.1-27	6044-000125	RING-E	1	SA	
8.1-28	JC63-00692A	SHIELD-P-SMPS	1	SNA	
8.1-29	JC44-00083A	SMPS-(V2)+HVPS	1	SA	AC 220
8.1-30	JC71-00042A	BAR-P_CROSS BOTTOM	2	SA	
8.1-31	JC31-00029A	FAN-DC	1	SA	
8.1-32	JC61-00667A	STOPPER-M-FAN80	2	SA	
8.1-34	JC96-03398A	ELA UNIT-DEVE;6K, ,-,-	1	SNA	
8.1-35	JC96-03418B	ELA UNIT-CASSETTE	1	SA	
8.1-36	JC96-03423B	ELA UNIT-SCF	1	SNA	
8.1-37	JC96-03412C	ELA UNIT-DUPLEX	1	SA	
8.1-39	JC96-03733A	ELA HOU-NPC3_HIGH	1	SA	ML-3561N

ITmanares.eu

Service BOM(SA : Service Available, **SNA** : Service not Available)

Drawer# (Section-No)	Part Code	Description	Q'ty	Status (SA/SNA)	Remark
8.1-39-1	JC92-01672A	PBA SUB-NPC3_HIGH	1	SA	ML-3561N
8.1-39-2	JC61-00809A	BRACKET-_M_NPC	1	SNA	ML-3561N
8.2 Cover Assembly					
8.2-0	JC96-03402E	ELA HOU BASE-HOUSHING	1	SNA	
8.2-1	JC96-03411E	ELA UNIT-COVER TOP	1	SA	
8.2-1-1	JC63-00699B	COVER-M_TOP	1	SA	
8.2-1-2	JC63-00704A	COVER-M-OPEN	1	SA	
8.2-1-3	JC72-01367B	PMO-STACKER	1	SA	
8.2-1-4	JC66-00902B	LEVER-M-STACKING 38	2	SA	
8.2-1-5	JC61-00656A	STOPPER-M-HINGE OPEN	2	SA	
8.2-1-6	JC63-00705D	COVER-M-OP PANEL	1	SA	
8.2-1-8	JC75-00095A	MEC-BRUSH ANTISTATIC	1	SNA	
8.2-1-9	JC92-01473C	PBA MAIN-LCD PANEL	1	SA	
8.2-1-10	JC64-00195A	KEY-M-BUTTON	1	SA	
8.2-1-11	JC64-00196A	KEY-M-ON LINE	1	SA	
8.2-1-12	JC64-00197A	KEY-M-SAVE MODE	1	SA	
8.2-1-13	JC64-00194A	WINDOW-M-LCD	1	SA	
8.2-1-14	JC63-00836A	GROUND-P-TOP_COVER	1	SA	
8.2-2	JC63-00684B	COVER-M-LEFT	1	SA	
8.2-3	JC63-00701B	COVER-M-RIGHT	1	SA	
8.2-4	JC63-00702B	COVER-M-CONTROL BOX	1	SA	
8.2-5	JC63-00685B	COVER-M-FRONT INNER	1	SA	
8.2-6	JC97-02232B	MEA UNIT-COVER REAR	1	SA	
8.2-6-1	JC63-00703B	COVER-M-REAR	1	SNA	
8.2-6-2	JC72-01357A	PMO-STACKER REAR	1	SNA	
8.2-6-3	JC70-00007A	ICT-BRKT REAR COVER	1	SNA	
8.2-6-4	JC61-01217A	GUIDE-M_EXIT	1	SNA	
8.2-6-5	JC72-01359A	PMO-STRIPE	1	SNA	
8.2-6-6	JC70-20901A	IEX-SHAFT IDLE,F/UP	2	SA	
8.2-6-7	JC72-20902A	PEX-ROLLER F/UP(2)	2	SA	
8.2-6-8	JC61-70909A	SPRING ETC-SAPERATION	2	SA	
8.2-6-9	JC68-01526A	LABEL(P)-JAM REMOVAL	1	SNA	
8.2-7	JC63-00696B	COVER-M-FRAME EXIT	1	SA	
8.3 Frame Assembly					
8.3-0	JC96-03416B	ELA UNIT-FRAME BASE,220V	1	SA	
8.3-1	JC61-01206A	FRAME-M_BASE	1	SNA	
8.3-2	JC97-02228A	MEA UNIT-PICK UP MP	1	SA	
8.3-2-1	JC66-00894A	SHAFT-M-PICK UP MP	1	SNA	
8.3-2-2	JC72-01003A	PMO-IDLE PICK UP MP	1	SA	
8.3-2-4	JC96-02686B	ELA UNIT-ROLLER P/UP MP	1	SA	
8.3-2-4-1	JC61-00705A	HOLDER-M-PICKUP MP	1	SA	
8.3-2-4-2	JC61-00685A	HOUSING-M-PICK UP MP	1	SA	
8.3-2-4-3	JC73-00224A	RUBBER-PICK UP MP	1	SA	
8.3-2-5	JC66-00893A	CAM-M-SHAFT	1	SNA	
8.3-3	JC97-02238A	MEA UNIT-GEAR IDLE	1	SA	
8.3-3-1	JC61-01200A	BRACKET-P-GEAR IDLE	1	SNA	
8.3-3-2	JC66-00872A	GEAR-FUSER IDLE 3	1	SNA	
8.3-3-3	JC66-00859A	GEAR-M-FUSER IDLE 2	1	SNA	
8.3-3-4	JC66-00858A	GEAR-M-FUSER DRV IN	1	SNA	
8.3-3-5	JC66-00868A	CLUTCH-M-HUB	1	SNA	
8.3-3-6	JC66-00417B	GEAR-RDCN FUSER OUT	1	SA	
8.3-3-7	6044-000231	RING-E	3	SA	
8.3-4	JC96-03516A	ELA HOU BASE-HOLDER	1	SA	
8.3-4-1	JC61-01248A	FRAME-M-HOLDER PAD	1	SNA	
8.3-4-2	JC61-00684A	HOLDER-M-PAD	1	SA	
8.3-4-3	JC73-00132A	RPR-FRICTION PAD MP	1	SA	
8.3-4-4	JC61-00387A	SPRING ETC-PAD	1	SA	
8.3-4-5	JC72-01365A	PMO-ACTUATOR EMPTY MP	1	SA	
8.3-4-6	JC61-70965A	SPRING ETC-EMPTY	1	SA	
8.3-4-7	0604-001095	PHOTO-INTERRUPTER	1	SA	
8.3-4-8	JC39-00451A	CBF HARNESS-MP_EMPTY	1	SA	
8.3-5	JC97-01034A	MEA RACK-EXIT ROLLER	4	SA	
8.3-5-1	JC72-41006A	PMO-HOLDER EXIT ROLL	1	SA	

ITRepares.eu

Service BOM(SA : Service Available, **SNA** : Service not Available)

Drawer# (Section-No)	Part Code	Description	Q'ty	Status (SA/SNA)	Remark
8.3-5-2	JC72-41007A	PMO-ROLLER FD F	1	SA	
8.3-5-3	JC72-41008A	PMO-ROLLER FD R	1	SA	
8.3-5-4	JC61-70911A	SPRING ETC-EXIT ROLL FD	1	SA	
8.3-6	JC66-00883A	ROLLER-EXIT_F/DOWN	1	SNA	
8.3-7	JC61-00673A	HOLDER-M-BUSHING EXIT	2	SA	
8.3-8	JC72-01310A	PMO-ACTUATOR OUTFULL	1	SA	
8.3-9	JC66-00674A	GEAR-M-EXIT Z17	1	SA	
8.3-10	JC61-00673A	HOLDER-M-BUSHING EXIT	2	SA	
8.3-11	JC97-02299A	MEA UNIT-ROLL EXIT DU	1	SA	
8.3-11-1	JC66-00882A	SHAFT-M-EXIT_DUPLEX	1	SNA	
8.3-11-2	JC73-00210A	RUBBER-EXIT_DUP	2	SA	
8.3-12	JC61-01262A	BUSH-M_EXIT D7	2	SNA	
8.3-13	JC66-00854A	GEAR-M-EXIT DUP Z21	1	SNA	
8.3-14	JC96-02127A	ELA HOU-CST SENSOR HAWK16	1	SA	
8.3-14-1	JC92-01336A	PBA SUB-CASSETTE	1	SNA	
8.3-14-2	JC70-00192A	IPR-PLATE SENSOR	1	SA	
8.3-14-3	JC70-00195A	IPR-BRACKET SENSOR	1	SA	
8.3-15	JC39-00261A	CBF HARNESS-SENSOR	1	SA	
8.3-16	JC61-00675A	GUIDE-P_REGI UPPER	1	SA	
8.3-17	JC61-70918A	SPRING ETC-LEVER	2	SA	
8.3-18	JC61-00671A	HOLDER-M-BUSHING TX	2	SA	
8.3-19	JC61-00691A	GUIDE-PLATE PAPER	1	SA	
8.3-20	JC70-00339A	IPR-P_GROUND PLATE PAPER	1	SA	
8.3-21	0604-001095	PHOTO-INTERRUPTER	1	SA	
8.3-23	JC39-00458A	CBF HARNESS-THERM	1	SA	
8.3-24	JC61-01581A	HOUSING-M_TERMINAL	1	SNA	
8.3-25	JC65-00013A	TERMINAL-P-FUSER	2	SA	
8.3-26	JC39-00456A	CBF HARNESS-FUSER	1	SA	
8.3-27	JC67-00099A	CAP-M-HOUS_TERM	1	SNA	
8.3-28	JC63-00670A	SHIELD-P-CTRL	1	SNA	
8.3-29	JC63-00677A	GROUND-P-MOTOR_DEVE	1	SNA	
8.3-30	JC63-00669A	GROUND-P_GUIDE TR	1	SNA	
8.3-31	JC63-00672A	GROUND-P-REGI_ROLLER	1	SNA	
8.3-32	JC63-00678A	GROUND-P-PICK_UP_MP	1	SNA	
8.3-33	JC63-00673A	GROUND-P-SCF_MAIN	1	SNA	
8.3-34	JC63-00671A	GROUND-P-MOTOR_MAIN	1	SNA	
8.3-35	JC63-00680A	GROUND-P-GUIDE_DUP	1	SNA	
8.3-36	JC67-00093A	CAP-M-GUIDE_HARNESS	1	SNA	
8.3-37	JC72-01356A	PMO-DUMMY_DEVE	1	SA	
8.3-38	JC96-01772A	ELA HOU-VARISTOR	1	SNA	
8.3-39	JC61-40001A	FOOT-ML80	2	SA	
8.3-40	JC72-01355A	PMO-REMOVE_LOCK_CST	1	SA	
8.3-41	JC66-00890A	SHAFT-M-GEAR_RETARD	1	SNA	
8.3-42	JC66-00439A	SHAFT-M-COUPLING RETARD	1	SA	
8.3-43	JC72-41191B	PMO-BEARING SHAFT	1	SA	
8.3-44	JC66-00420A	GEAR-REGI Z25	1	SA	
8.3-45	JC72-41191B	PMO-BEARING SHAFT	1	SA	
8.3-47	JC96-03661A	ELA HOU-FRAME_LSU_LO	1	SA	
8.3-47-1	JC61-01207A	FRAME-M-LSU_LOWER	1	SNA	
8.3-47-2	JC92-01705A	PBA SUB-TONER SENSOR	1	SA	
8.3-47-3	JC65-00004A	TERMINAL-P_DEVE	4	SA	
8.3-47-4	JC92-01730A	PBA SUB-COVER OEPN	1	SA	
8.3-47-5	JC67-00095A	CAP-M_COVER_OPEN	1	SNA	
8.3-48	JC96-03425A	ELA UNIT-FEED3X5	1	SA	
8.3-48-1	JC61-01240A	HOLDER-M-SAW	1	SNA	
8.3-48-2	JC61-01235A	GUIDE-P-TRANSFER_FRONT	1	SNA	
8.3-48-3	JC61-01236A	PLATE-P-SAW	1	SNA	
8.3-48-4	JC66-00889A	SHAFT-M ROLLER_BELT	1	SNA	
8.3-48-5	JC66-00887A	ROLLER-M IDLE_BELT	2	SNA	
8.3-48-6	JC70-20901A	IEX-SHAFT IDLE,F/UP	2	SA	
8.3-48-7	JC73-00206A	RUBBER-BELT_FEED	2	SA	
8.3-48-8	JC61-01239A	GUIDE-M SHAFT_BELT	1	SNA	
8.3-49	JC96-03419A	ELA UNIT-RETARD	1	SA	
8.3-49-1	JC61-01231A	FRAME-M-RETARD	1	SNA	

ITSpares.eu

Service BOM(SA : Service Available, **SNA** : Service not Available)

Drawer# (Section-No)	Part Code	Description	Q'ty	Status (SA/SNA)	Remark
8.3-49-10	JC70-00520A	HUB-IN_RETARD	1	SNA	
8.3-49-11	JC73-00207A	RUBBER-RETARD	1	SA	
8.3-49-2	JC61-01232A	HOLDER-M-RETARD	1	SNA	
8.3-49-3	JC61-00013A	SPRING ETC-PAD	2	SNA	
8.3.49-5	JC61-00635A	HOUSING-M-RETARD	1	SA	
8.3-49-4	JC61-00652A	BUSH-M-RETARD	1	SA	
8.3-49-6	JC66-00590A	SHAFT-RETARD	1	SA	
8.3-49-7	6044-000125	RING-E	2	SA	
8.3-49-8	JC72-00993A	PMO-HUB OUT RETARD	1	SA	
8.3-49-9	6107-001157	SPRING-TS	1	SA	
8.3-50	JC96-03421A	ELA UNIT-FEED2 IDLE	2	SA	
8.3-50-1	JC61-01242A	HOLDER-IDLE_FEED2	1	SNA	
8.3-50-2	JC67-00105A	CAP-M IDLE_FEED2	2	SNA	
8.3-50-3	JC61-00387A	SPRING ETC-PAD	2	SA	
8.3-50-4	JC61-00652A	BUSH-M-RETARD	2	SA	
8.3-50-5	JC66-00912A	SHAFT-IDLE_FEED2	1	SA	
8.3-50-6	6044-000125	RING-E	1	SA	
8.3-50-7	JC66-00892A	ROLLER-M IDLE_FEED2	1	SNA	
8.3-50-9	JC66-00591A	SHAFT-HUB IN	1	SA	
8.3-51	JC61-01250A	STOPPER-M-KNOCK UP MP_L	1	SNA	
8.3-52	JC61-01249A	STOPPER-M-KNOCK UP MP_R	1	SA	
8.3-53	JC61-01252A	RAIL-M-LEFT_DUP	1	SNA	
8.3-54	JC61-01253A	RAIL-M-RIGHT_DUP	1	SNA	
8.3-55	JC72-41191B	PMO-BEARING SHAFT	1	SA	
8.3-56	JC66-00420A	GEAR-REGI Z25	1	SA	
8.3-57	JC66-10202A	BEARING-PICK UP	1	SA	
8.3-58	JC72-00991A	PMO-ACTUATOR EMPTY	1	SA	
8.3-59	JC96-03422A	ELA UNIT-PICK UP	1	SA	
8.3-59-1	JC66-00910A	SHAFT-PICK UP	1	SA	
8.3-59-2	JC97-02233A	MEA UNIT-P/UP_HOUSING	1	SA	
8.3-59-2-1	JC72-01361A	PMO-M IDLE-PICK UP	1	SA	
8.3-59-2-3	JC61-01238A	HOUSING-M-PICK UP	1	SNA	
8.3-59-3	JC72-01362A	PMO- M CAM_PICK_UP	1	SNA	
8.3-59-4	JC66-00911A	SHAFT-FEED1	1	SA	
8.3-59-5	JC81-03458A	AS-FEED1 ROLLASS'Y	1	SA	
8.3-59-5-1	JC61-01237A	HOUSING-M-FEED1	1	SNA	
8.3-59-5-2	JC73-00208A	RUBBER-FEED1	1	SA	
8.3-59-6	JC63-00674A	GROUND-P-PICK_UP_MAIN	1	SNA	
8.3-59-7	JC66-10202A	BEARING-PICK UP	1	SA	
8.3-59-8	JC72-00382B	PMO-BUSHING FEED	2	SA	
8.3-59-9	JC61-01234A	GUIDE-P-FRONT-DUP-PICKUP	1	SNA	
8.3-59-10	JC61-01233A	GUIDE-M SUPPORT-PICKUP	1	SNA	
8.3-60	JC96-03420A	ELA UNIT-FEED2	1	SA	
8.3-60-1	JC61-01241A	FRAME-M-PICK UP	1	SNA	
8.3-60-2	JC72-00382B	PMO-BUSHING FEED	2	SA	
8.3-60-3	JC66-00891A	SHAFT-M-FEED2	1	SNA	
8.3-60-4	JC66-10202A	BEARING-PICK UP	1	SA	
8.3-60-5	JC73-00205A	RUBBER-ROLLER_FEED2	3	SA	
8.3-61	JC92-01704A	PBA SUB-JOINT	1	SA	
8.3-62	JC39-00441A	CBF HARNESS-TRAY OUT	1	SA	
8.3-63	JC67-00094A	CAP-M_POWER	1	SNA	
8.3-64	JC39-00455A	CBF HARNESS-INLET	1	SA	
8.3-65	JC66-00888A	SHAFT-M BELT_GEAR	1	SNA	
8.3-66	JC72-41191B	PMO-BEARING SHAFT	1	SA	
8.3-67	JC66-00674A	GEAR-M-EXIT Z17	1	SA	
8.3-68	JC67-00092A	CAP-M-DEVE_MOTOR	1	SNA	
8.3-69	JC39-00449A	CBF HARNESS-DUPLEX	1	SNA	
8.3-71	JC67-00036A	CAP-M-WIRE PTL LOWER	1	SA	
8.3-72	JC65-00001A	TERMINAL-P_PTL	1	SA	
8.3-73	JC39-00181A	CBF HARNESS-PTL	1	SA	
8.3-74	JC92-01681A	PBA SUB-COVER_OPEN	1	SA	
8.3-76	JC92-01512B	PBA SUB-EXIT SENSOR	1	SA	
8.3-77	JC92-01261C	PBA SUB-FUSER SW	1	SA	
8.3-78	JC61-01218A	GUIDE-M-FRONT	1	SA	

ITspares.eu

Service BOM(SA : Service Available, **SNA** : Service not Available)

Drawer# (Section-No)	Part Code	Description	Q'ty	Status (SA/SNA)	Remark
8.3-79	JC65-00010A	TERMINAL-P-GUIDE_FRONT	1	SNA	
8.3-80	JC96-03406A	ELA UNIT-FUSER-110V	1	SA	AC110V
8.3-80	JC96-03406B	ELA UNIT-FUSER-220V	1	SA	AC 220V
8.3-81	JC72-00317A	PMO-GUIDE DEVE L	1	SA	
8.3-82	JC72-00318A	PMO-GUIDE DEVE R	1	SA	
8.3-83	JC61-70932A	SPRING ETC-GUIDE DEVE	2	SA	
8.3-84	JC65-00008A	TERMINAL-P-TR_KESTREL	1	SA	
8.3-86	JC65-00009A	TERMINAL-SPRING_TR	1	SA	
8.3-87	JC92-01488A	PBA MAIN-ZENER	1	SA	
8.3-89	JC63-00679A	GROUND-P-ZENER	1	SNA	
8.3-90	JC63-00676A	GROUND-P-FUSER	1	SNA	
8.3-91	JC65-00006A	TERMINAL-P_HV CARDINAL	4	SA	
8.3-92	JC97-01401A	MEA UNIT-TERMINAL	4	SA	
8.3-93	JC39-00457A	CBF HARNESS-HVPS	1	SA	
8.3-94	JC70-00332A	IPR-P_GROUND OPC	1	SA	
8.3-95	JC92-01511B	PBA SUB-EMPTY SENSOR	1	SA	
8.3-96	JC39-00440A	CBF HARNESS-SENSOR	1	SA	
8.3-97	JC92-01262C	PBA SUB-FEED SENSOR	1	SA	
8.3-98	JC67-00098A	CAP-M_HV	1	SNA	
8.3-99	JC67-00097A	CAP-M_SENSOR_FEED	1	SNA	
8.3-100	JC67-00138A	DUCT-M_FAN	1	SA	
8.4 Fuser Unit					
8.4-0	JC96-03406B	ELA UNIT-FUSER-220V	1	SA	AC 220V
8.4-1	JC96-03427B	ELA UNIT-FUSER_UPPER ,220V	1	SNA	
8.4-1-2	JC71-00054A	ELECTRODE-P-FU_L	1	SNA	
8.4-1-3	1404-001141	THERMISTOR-NTC	1	SNA	
8.4-1-4	JC72-41012C	PMO-GUIDE CLAW GREEN	4	SA	
8.4-1-5	6107-001159	SPRING-TS	2	SA	
8.4-1-6	JC61-70909A	SPRING ETC-SAPERATION	4	SA	
8.4-1-7	JC75-00095A	MEC-BRUSH ANTISTATIC	1	SA	
8.4-1-8	JC71-00053A	ELECTRODE-P-FU_R	1	SNA	
8.4-1-9	JC61-00785A	HOLDER-M-IDLE ROLLER	3	SA	
8.4-1-10	JC72-40981A	PMO-ROLLER UPPER DP	3	SA	
8.4-1-11	JC61-01215A	HOLDER-M-LEVER_L	1	SNA	
8.4-1-12	JC61-01216A	HOLDER-M-LEVER_R	1	SNA	
8.4-1-13	JC71-00052A	ELECTRODE-P-SUPPORT	2	SNA	
8.4-1-15	6003-000196	SCREW-TAPTITE	2	SA	
8.4-1-16	JC66-00932A	ROLLER-HEAT	1	SA	
8.4-1-17	6601-001346	BEARING-BALL	2	SA	
8.4-1-18	JC67-00101A	CAP-M-END	1	SNA	
8.4-1-19	JC61-01260A	BUSH-M_HR	2	SNA	
8.4-1-20	JC66-00878A	GEAR-M-FUSER Z49	1	SNA	
8.4-1-21	JC61-01550A	STOPPER-SPACER	2	SNA	
8.4-1-22	JC71-00051A	ELECTRODE-FU	2	SNA	
8.4-1-23	JC61-70932A	SPRING ETC-GUIDE DEVE	2	SA	
8.4-1-24	JC67-00111A	CAP-M_ACTUATOR_UP	1	SNA	
8.4-1-25	JC63-00726A	COVER-M-REAR GUIDE UP	1	SNA	
8.4-1-26	JC71-00055A	ELECTRODE-P-SU CARBON	1	SNA	
8.4-1-27	JC70-20901A	IEX-SHAFT IDLE,F/UP	2	SA	
8.4-1-28	JC61-01284A	HOLDER-P-SL CONNECTOR	1	SNA	
8.4-1-29	JC72-20902A	PEX-ROLLER F/UP(2)	2	SA	
8.4-1-H	JC96-03722A	ELA UNIT-HEAT 110V	1	SA	
8.4-1-H	JC96-03723A	ELA UNIT-HEAT 220V	1	SA	
8.4-2	JC97-02236A	MEA UNIT-FUSER_BK_G	1	SNA	
8.4-2	JC63-00681A	COVER-M-FUSER_UPPER	1	SNA	
8.4-2-1	JC61-01213A	BRACKET-P-FUSER	1	SNA	
8.4-2-2	JC66-00426B	GEAR-IDLE 23	1	SA	
8.4-2-3	JC66-00869A	GEAR-M-IDLE 25	1	SNA	
8.4-2-4	6044-000231	RING-E	1	SA	
8.4-3	JC97-02223A	MEA UNIT-FUSER_LOWER	1	SNA	
8.4-3-1	JC66-00931A	ROLLER-PRESSURE	1	SA	
8.4-3-2	JC61-01261A	BUSH-M-PR	2	SNA	
8.4-3-3	6107-001253	SPRING-CS	2	SNA	

ITSpares.eu

Service BOM(SA : Service Available, **SNA** : Service not Available)

Drawer# (Section-No)	Part Code	Description	Q'ty	Status (SA/SNA)	Remark
8.4-3-4	JC63-00725A	COVER-M-FU_LOWER_OPEN	1	SNA	
8.4-3-5	JC66-00880A	LEVER-P-RELEASE_L	1	SNA	
8.4-3-6	6107-001172	SPRING-CS	2	SA	
8.4-3-7	JC67-00102A	CAP-M-FUSER LOCK	1	SNA	
8.4-3-8	JC66-00881A	LEVER-P-RELEASE_R	1	SNA	
8.4-3-9	JC61-01214A	HOLDER-M-PR SHAFT	1	SNA	
8.4-3-10	JC63-00683A	GROUND-P-HR	1	SNA	
8.4-3-11	JC61-70903A	SPRING ETC-ACTUATOR	1	SA	
8.4-3-12	JC72-01358A	PMO-ACTUATOR EXIT	1	SNA	
8.4-3-13	JC67-00103A	CAP-M-ACTUATOR	1	SNA	
8.4-3-14	6006-001078	SCREW-TAPTITE	2	SNA	
8.4-4	JC97-02235A	MEA UNIT-FUSER_GU_R	1	SNA	
8.4-4-1	JC61-01226A	GUIDE-M-REAR	1	SNA	
8.4-4-2	JC72-00382A	PMO-BUSHING TX	3	SNA	
8.4-4-3	JC66-00879A	SHAFT-M-EXIT_F_UP	1	SNA	
8.4-4-4	JC66-00854A	GEAR-M-EXIT DUP Z21	1	SNA	
8.4-4-5	JC73-00209A	RUBBER-EXIT_F_UP	2	SNA	
8.4-4-6	JC61-01549A	HOLDER-M REAR_LEVER	1	SNA	
8.5 REGI Assembly					
8.5-0	JC96-03665A	ELA UNIT-REGI	1	SA	
8.5-1	JC61-00674A	GUIDE-P_REGI LOWER	1	SA	
8.5-2	JC66-00450A	ROLLER-REGI LOWER L	1	SNA	
8.5-3	JC66-00446A	SHAFT-REGI UPPER	1	SA	
8.5-4	JC66-00647A	ROLLER-M_REGI IDLE L25	2	SA	
8.5-5	JC66-00648A	ROLLER-M_REGI IDLE S25	2	SA	
8.5-6	6044-000231	RING-E	4	SA	
8.5-7	6107-001158	SPRING-TS	1	SA	
8.5-8	JC72-00998A	PMO-ACTUATOR REGISHUTTER	1	SA	
8.5-9	JC61-00670A	GUIDE-P_REGI PLATE	1	SA	
8.5-10	JC75-00095A	MEC-BRUSH ANTISTATIC	1	SA	
8.5-11	JC61-00669A	BUSH-M-ROLLER REGI L	2	SA	
8.5-12	JC66-00420A	GEAR-REGI Z25	1	SA	
8.5-13	JC61-00669A	BUSH-M-ROLLER REGI U	2	SA	
8.5-14	6107-001155	SPRING-ES	2	SA	
8.5-15	JC61-01550A	STOPPER-SPACER	3	SNA	
8.6 Main Motor Assembly					
8.6-0	JC96-03409A	ELA UNIT-MAIN MOTOR	1	SA	
8.6-1	JC61-01204A	BRACKET-P-MAIN	1	SNA	
8.6-2	JC31-00040A	MOTOR DC-BLDC MAIN	1	SA	
8.6-3	6031-001255	WASHER-PLAIN	5	SA	
8.6-4	JC66-00867A	GEAR-M-OPC DRV	1	SNA	
8.6-5	JC66-00864A	GEAR-M-REGI DRV	1	SNA	
8.6-6	JC66-00860A	GEAR-M-RDCN FUSER	1	SNA	
8.6-7	JC66-00875A	GEAR-M-FUSER IDLE 1	1	SNA	
8.6-8	JC66-00865A	GEAR-M-RDCN REGI	1	SNA	
8.6-9	JC66-00866A	GEAR-M-RDCN PICK UP	1	SNA	
8.6-10	JC66-00861A	GEAR-M-MP DRV	1	SNA	
8.6-11	JC66-00862A	GEAR-M-FEED DRV	1	SNA	
8.6-12	JC66-00873A	GEAR-M-RDCN MP	1	SNA	
8.6-13	JC66-00874A	GEAR-M-RDCN RETARD	1	SNA	
8.6-14	JC66-00863A	GEAR-M-PICK UP DRV	1	SNA	
8.6-15	6044-000125	RING-E	1	SA	
8.7 Deve Motor Assembly					
8.7-0	JC96-03408A	ELA UNIT-DEVE MOTOR	1	SA	
8.7-1	JC31-00039A	MOTOR DC-BLDC DEVE	1	SA	
8.7-2	JC61-01201A	BRACKET-P-DEVE	1	SNA	
8.7-3	JC61-01203A	BRACKET-P-SWING	1	SNA	
8.7-4	JC66-00915A	SHAFT-SWING DEVE	1	SNA	
8.7-5	JC66-00871A	GEAR-M-RDCN DEVE	1	SNA	
8.7-6	JC66-00857A	GEAR-M-SWING	1	SNA	
8.7-7	6031-001255	WASHER-PLAIN	2	SA	
8.8 Exit Sorenoid Assembly					

ITSpares.eu

Service BOM(SA : Service Available, **SNA** : Service not Available)

Drawer# (Section-No)	Part Code	Description	Q'ty	Status (SA/SNA)	Remark
8.8-0	JC96-03426A	ELA UNIT-EXIT SOL	1	SA	
8.8-1	JC61-01205A	BRACKET-P-EXIT	1	SNA	
8.8-2	JC66-00869A	GEAR-M-IDLE 25	1	SNA	
8.8-3	JC66-00869A	GEAR-M-IDLE 25	1	SNA	
8.8-4	JC66-40911A	GEAR-DP,IDLE	1	SA	
8.8-5	JC66-00100A	GEAR-6	1	SNA	
8.8-6	6031-001255	WASHER-PLAIN	4	SA	
8.8-7	JC66-00100A	GEAR-6	1	SNA	
8.8-8	JC33-00008A	SOLENOID-DUPLEX	1	SA	
8.8-9	JC61-01202A	BRACKET-P-LINK SWING	1	SNA	
8.8-10	JC66-00855A	GEAR-M-SWING DUPLEX	1	SNA	
8.8-11	JC66-00856A	GEAR-M-RDCN EXIT	1	SNA	
8.8-12	JC66-00916A	SHAFT-SWING DUPLEX	1	SNA	
8.9 Cassette Assembly					
8.9-0	JC96-03418B	ELA UNIT-CASSETTE	1	SA	
8.9-1	JC61-01220B	FRAME-M_CASSETTE	1	SNA	
8.9-2	JC61-01221B	GUIDE-M-HANDLE	1	SNA	
8.9-3	JC64-00189B	INDICATOR-M-EMPTY	1	SNA	
8.9-4	JC61-01245A	PLATE-P-KNOCK UP	1	SNA	
8.9-5	JC61-00455A	SPRING ETC-PLATE K/UP	2	SA	
8.9-6	JG66-40003A	GEAR-PINION	1	SA	
8.9-7	JC67-00037A	CAP-M-GUIDE SIDE,L	1	SA	
8.9-8	JC61-01222A	GUIDE-P-SIDE_L	1	SNA	
8.9-9	JC61-01225B	GUIDE-M_SIDE LOCK	1	SNA	
8.9-10	JC61-01244A	GUIDE-P-SIDE_R	1	SNA	
8.9-11	JC61-01226B	GUIDE-M-REAR	1	SNA	
8.9-12	JC61-00751A	GUIDE-P-REAR PAPER CST	1	SA	
8.9-13	JC61-00414A	SPRING ETC-GUIDE PAPER	1	SA	
8.9-14	JC61-00267B	GUIDE-M_LOCK A	1	SA	
8.9-15	JC61-01226B	GUIDE-M-REAR	1	SNA	
8.9-16	JC61-01224B	GUIDE-M_EXTENTION CST	1	SNA	
8.9-17	JC61-01223A	BRACKET-P-EXTENTION	1	SNA	
8.9-18	JC61-01230B	GUIDE-M-PAPER	1	SNA	
8.9-19	JC61-01228A	HOLDER-M-PAD_HOUSING	1	SNA	
8.9-20	JC97-02234A	MEA UNIT-HOLDER PAD	1	SA	
8.9-20-1	JC61-01229A	HOLDER-M-PAD	1	SNA	
8.9-20-2	JC63-00407A	SHEET-HOLDER PAD R2	1	SNA	
8.9-20-3	JC73-00140A	RPR-FRICTION PAD	1	SA	
8.9-20-4	JC70-00314A	IPR-PLATE PAD	1	SA	
8.9-21	JC61-70911A	SPRING ETC-EXIT ROLL FD	1	SA	
8.9-25	JC72-41210A	PMO-LOCKER PLATE	1	SA	
8.9-26	JG61-70531A	SPRING ETC-LOCKER,PLATE	1	SA	
8.9-27	JC61-01227A	GUIDE-M-PAPER SIZE	1	SNA	
8.10 SCF Unit					
8.10-0	JC96-03423B	ELA UNIT-SCF	1	SNA	
8.10-1	JC61-01247B	FRAME-M-SCF	1	SNA	
8.10-2	JC63-00688B	COVER-M-RIGHT_SCF	1	SNA	
8.10-3	JC63-00687B	COVER-M-LEFT_SCF	1	SNA	
8.10-4	JC63-00686A	COVER-M-DUMMY_SCF	1	SNA	
8.10-5	JC92-01703A	PBA SCF	1	SA	
8.10-6	JB39-40532A	CBF HARNESS-OP	2	SNA	
8.10-8	JC61-00804A	BUSH-CABLE	1	SNA	
8.10-9	JC39-00357A	CBF HARNESS-SCF INTERFACE	1	SA	
8.10-10	JC33-00012A	SOLENOID-MAIN	1	SA	
8.10-11	JC96-03405A	BRACKET-P-SCF_MOTOR	1	SA	
8.10-11-1	JC61-01219A	BRACKET-P-SCF_MOTOR	1	SNA	
8.10-11-2	JC31-00002A	MOTOR STEP-7.5_DEG	1	SA	
8.10-11-3	JC66-00885A	GEAR-M SCF-RDCN RETARD	1	SNA	
8.10-11-4	JC66-00886A	GEAR-M SCF_RDCN FEED	1	SNA	
8.10-11-5	JC66-00884A	GEAR-M SCF_RDCN PICK UP	1	SNA	
8.10-12	JB39-40532A	CBF HARNESS-OP	1	SNA	
8.10-13	JC70-00464A	IPR-GROUND SPRING_FEED	1	SNA	
8.10-14	JC72-41191B	PMO-BEARING-SHAFT	3	SNA	

I-Spares.au

Service BOM(SA : Service Available, **SNA** : Service not Available)

Drawer# (Section-No)	Part Code	Description	Q'ty	Status (SA/SNA)	Remark
8.10-15	JC47-00009B	MEP-CLUTCH FEED SCF	1	SA	
8.10-16	6044-000125	RING-E	5	SNA	
8.10-17	JC66-00441A	SHAFT-M-COUPLING RETARD S	1	SNA	
8.10-18	JC66-00890A	SHAFT-M-GEAR_RETARD	1	SNA	
8.10-19	JC66-00420A	GEAR-REGI Z25	1	SNA	
8.10-20	JC71-00042A	BAR-P_CROSS BOTTOM	2	SNA	
8.10-21	JC72-01355A	PMO-REMOVE_LOCK_CST	1	SNA	
8.10-22	JC96-03424A	ELA UNIT-RETARD SCF	1	SA	
8.10-22-1	6044-000231	RING-E	2	SNA	
8.10-22-2	6107-001157	SPRING-TS	1	SNA	
8.10-22-3	JC61-00013A	SPRING ETC-PAD	2	SNA	
8.10-22-4	JC61-00635A	HOUSING-M-RETARD	1	SNA	
8.10-22-5	JC61-00638A	HOLDER-M-RETARD	1	SNA	
8.10-22-6	JC61-00652A	BUSH-M-RETARD	2	SNA	
8.10-22-7	JC66-00590A	SHAFT-RETARD	1	SNA	
8.10-22-8	JC66-00591A	SHAFT-HUB IN	1	SNA	
8.10-22-9	JC72-00993A	PMO-HUB OUT RETARD	1	SNA	
8.10-22-10	JC72-00994A	PMO-HUB IN RETARD	1	SNA	
8.10-22-11	JC61-01246A	FRAME-M-RETARD_SCF	1	SNA	
8.10-22-12	JC73-00207A	RUBBER-RETARD	1	SNA	
8.10-23	JC72-01360A	PMO-M DUMMY-SCF_LEFT	1	SNA	
8.10-24	JC72-01363A	PMO-M DUMMY-SCF_RIGHT	1	SNA	
8.10-25	JC66-00914A	SHAFT-PICK UP_SCF	1	SA	
8.10-26	JC66-00913A	SHAFT-FEED1_SCF	1	SA	
8.10-27	JC92-01686A	PBA SCF COVER OPEN	1	SA	
8.10-28	JC96-02127A	ELA HOU-CSTSENSOR HAWK1	1	SNA	
8.10-29	0604-001095	PHOTO-INTERRUPTER	1	SNA	
8.10-30	JC72-00992A	PMO-ACTUATOR EMPTY,SCF	1	SA	
8.10-31	JC66-00534A	GEAR-SCF PICK_UPCAM	1	SNA	
8.10-32	JC61-40001A	FOOT-ML80	2	SNA	
8.10-33	JC70-11028A	IPR-GROUND TOP	1	SNA	
8.10-34	JC97-02233A	MEA UNIT-PICK UP HOU	1	SA	
8.10-34-1	JC72-01361A	PMO-M IDLE-PICK UP	2	SNA	
8.10-34-2	JC73-00223A	RUBBER-PICK UP	1	SNA	
8.10-34-3	JC61-01238A	RUBBER-PICK UP	1	SNA	
8.10-35	JC72-00382B	PMO-BUSHING FEED	3	SNA	
8.10-36	JC72-01364A	PMO-M DUMMY_SHAFT	1	SNA	
8.10-37	6107-001214	SPRING-ES	1	SNA	
8.10-38	JC81-03458A	AS-FEED1 ROLLASS'Y	1	SA	
8.10-38-1	JC61-01237A	HUOUSIN-M_FEED1	1	SNA	
8.10-38-2	JC73-00208A	RUBBER-FEED1	1	SNA	
8.10-40	JC39-00355A	CBF HARNESS-MOTOR	1	SNA	
8.10-41	JC39-00446A	CBF HARNESS-SCF EMPTY	1	SNA	
8.10-42	JC39-00447A	CBF HARNESS-SCF CASSETTE	1	SNA	
8.10-43	JC39-00448A	CBF HARNESS-SCF P-SIZE	1	SNA	
8.11 Duplex Unit					
8.11-0	JC96-03412C	ELA UNIT-DUPLEX	1	SA	
8.11-1	JC61-01254A	FRAME-M-DUPLEX	1	SNA	
8.11-2	JC61-01255A	GUIDE-M-UPPER_DUP	1	SNA	
8.11-3	JC63-00693B	COVER-M-REAR_DUP	1	SNA	
8.11-4	JC61-01256A	GUIDE-M-ALIGN_DUP	1	SNA	
8.11-5	JC67-00107A	CAP-M-CONNECTOR_DUP	1	SNA	
8.11-6	JC67-00106A	DUCT-M-FAN_DUP	1	SNA	
8.11-7	JC31-00004A	FAN-DC_HAWK	1	SNA	
8.11-8	JC92-01679A	PBASUB-DPX_SCF	1	SA	
8.11-9	6502-000132	CABLE CLAMP	1	SNA	
8.11-10	JC70-00512A	IPR-TERMINAL GND_DUP	1	SNA	
8.11-11	JC64-00191A	LOCKER-M-DUP	1	SNA	
8.11-12	JC63-00706A	SHEET-FRAME_DUP	1	SNA	
8.11-13	6107-001165	SPRING-TS	1	SNA	
8.11-14	JC72-01366A	PMO-ACTUATOR FEED DUP	1	SNA	
8.11-15	JC92-01362A	PBA SUB-MPSEN	1	SNA	
8.11-16	JB39-00103A	CBF HARNESS-POWER GND	1	SNA	

IT-Spares.eu

Service BOM(SA : Service Available, **SNA** : Service not Available)

Drawer# (Section-No)	Part Code	Description	Q'ty	Status (SA/SNA)	Remark
8.11-17	JC31-00009A	MOTOR STEP	1	SNA	
8.11-18	JC61-01257A	BRACKET-P-MOTOR_DUP	1	SNA	
8.11-19	JC66-00897A	PULLEY-M-30_DUP	1	SNA	
8.11-20	6602-001084	BELT-TIMING GEAR	1	SNA	
8.11-21	JC66-00898A	PULLEY-M-30-DUMMY_DUP	1	SNA	
8.11-22	6044-000231	RING-E	1	SNA	
8.11-23	JC39-00450A	CBF HARNESS-D_JOINT	1	SNA	
8.11-24	JC66-00444A	SHAFT-IDLE ROLL, DUP	2	SNA	
8.11-25	JC66-00896A	ROLLER-M-IDLE_ DUP	2	SNA	
8.11-26	JK72-00058A	PCT-SILP WASHER	4	SNA	
8.11-27	JC61-01277A	SPRING ETC-DUP	2	SNA	
8.11-28	JC66-00900A	PULLEY-M-18-DUMMY_DUP	4	SNA	
8.11-29	JC66-00899A	PULLEY-18_DUP	2	SNA	
8.11-30	JC61-00665A	BUSH-M-FEED, DUP	4	SNA	
8.11-31	JC66-20901A	BELT-TIMMING	1	SNA	
8.11-32	JC66-00901A	ROLLER-FEED_DUP	2	SNA	
8.11-33	6044-000107	RING-C	2	SNA	
8.11-34	JC70-00457A	ICT-STUD PAPER GUIDE, DP	3	SNA	

IT-Spares.eu